AC RING TYPE INDUCTIVE SENSORS WITH ONE-SHOT FOR CONNECTOR

10mm	15mm	21mm
○	○	○
-	-	-
PBT	PBT	PBT
●	●	●
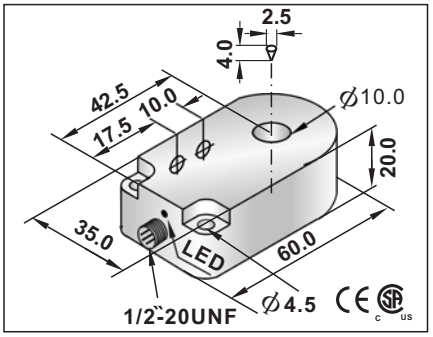	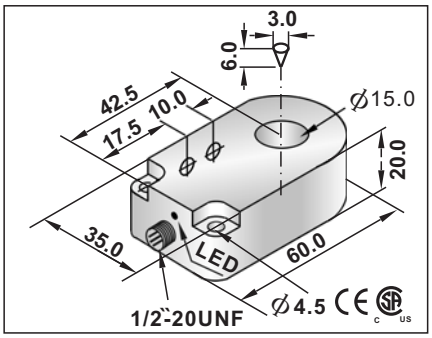	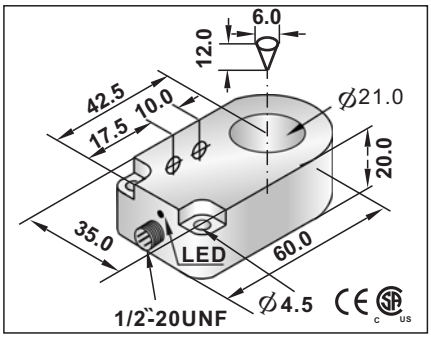
20~250VAC	20~250VAC	20~250VAC
105ms	105ms	105ms
<1.8mA	<1.8mA	<1.8mA
≤400mA	≤400mA	≤400mA
<1.8mA	<1.8mA	<1.8mA
5A(20ms)	5A(20ms)	5A(20ms)
5mA	5mA	5mA
<8V AC at 400mA	<8V AC at 400mA	<8V AC at 400mA
8HZ	8HZ	8HZ
100mS	100mS	100mS
<15 % (Sr)	<15 % (Sr)	<15 % (Sr)
<1.0% (Sr)	<1.0% (Sr)	<1.0% (Sr)
IP67	IP67	IP67
-25°C to 70°C	-25°C to 70°C	-25°C to 70°C
<10%(sr)	<10%(sr)	<10%(sr)
D=2.5mm;L=4mm	D=3mm;L=6mm	D=6mm;L=12mm
-	-	-
-	-	-
-	-	-
RFI>3V/m / EFT>1KV / ESD>4KV (contact)	RFI>3V/m / EFT>1KV / ESD>4KV (contact)	RFI>3V/m / EFT>1KV / ESD>4KV (contact)
IEC 60947-5-2,Part 7.4.1 / IEC 60947-5-2,Part 7.4.2	IEC 60947-5-2,Part 7.4.1 / IEC 60947-5-2,Part 7.4.2	IEC 60947-5-2,Part 7.4.1 / IEC 60947-5-2,Part 7.4.2
RRP2-R1020A-AUL3/T 58	RRP2-R1520A-AUL3/T 62	RRP2-R2120A-AUL3/T 62
RRP2-R1020A-BUL3/T 58	RRP2-R1520A-BUL3/T 62	RRP2-R2120A-BUL3/T 62

AC RING TYPE INDUCTIVE SENSORS WITH ONE-SHOT FOR CONNECTOR

43mm		
○		
-		
PBT		
●		
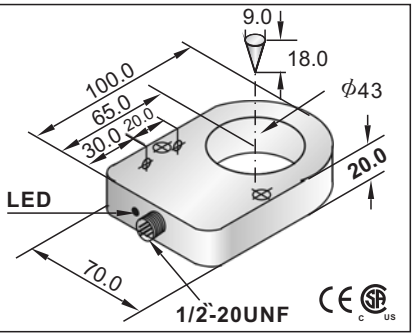		
20~250VAC		
105ms		
<1.8mA		
≤400mA		
<1.8mA		
5A(20ms)		
5mA		
<8V AC at 400mA		
8HZ		
100mS		
<15 % (Sr)		
<1.0% (Sr)		
IP67		
-25°C to 70°C		
<10%(sr)		
D=9mm;L=18mm		
-		
-		
-		
RFI>3V/m / EFT>1KV / ESD>4KV (contact)		
IEC 60947-5-2,Part 7.4.1 / IEC 60947-5-2,Part 7.4.2		
RRP2-R4320A-AUL3/T 58		
RRP2-R4320A-BUL3/T 58		
approx.134		